MOODY INTERNATIONAL UKAS MANAGEMENT SYSTEMS 014 Rgn No : Q180788 ISO 9001:2008 Certified

Spring Vibration Isolators

4-inch Rated Deflection • YRS-F1 • YRS-F2 • YRS-F4

YRS-F Spring of 4-inch rated deflection, welded steel housing, restrained vibration isolators consist of laterally stable, free standing, large diameter springs, with horizontal stiffness of at least 1.0 times the rated vertical stiffness and provide 50% overload capacity. The steel housing assemblies limit vertical movements of the equipment under isolation by the travel limit stop bolts and the side support frames. The spring elements are assembled with top plate, spring mount plate with level adjustment nuts and base plate with acoustical pads. Bolting holes are provided in bottom base plate.

YRS-F restrained isolators, due to its high deflection (4-inch) design are recommended for equipment that undergo large amount of fluid load changes during service or maintenance near critical areas, such as chillers, boillers and cooling towers. For equipment installed in large floor span areas or on roof tops the 4-inch deflection YRS-F isolators are best suited to compensate for the deflection of the floor structure and resistance of strong wind load.

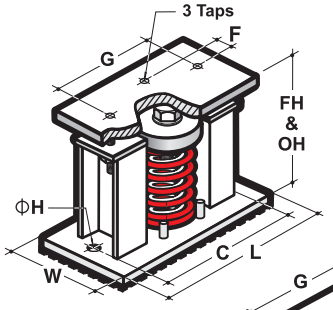

YRS-F1

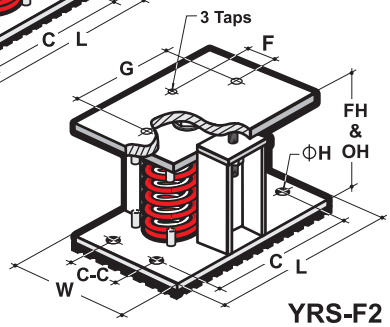

YRS-F2

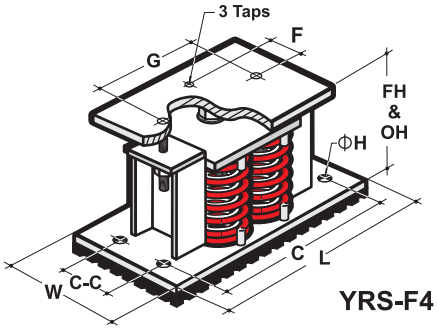

YRS-F4

Specifications

Restraint vibration isolator shall be of welded steel housing assemblies and consist of top load plate, with travel limit bolts, spring cap with level adjusting bolt and spring cup with internal acoustical pad. Bolting holes are provided in both the top load plate and the bottom base plate. All the steel housing assemblies, level adjust nuts, locking screws and washers are hot-dipped galvanised for corrosion proof as standard.

Spring shall be free standing, large diameter with horizontal stiffness of at least 1.0 times the rated vertical stiffness and provide 50% overload capacity. Springs shall be color epoxy powder coated for corrosion resistance and load identification.

MODEL	IMPERIAL UNITS			COLOR CODE	METRIC UNITS			DIMENSION (mm)								
	Rated Load (lbs.)	Rated Defl. (in.)	Spring Rate (lbs./in.)		Rated Load (kg)	Rated Defl. (mm)	Spring Rate (kg/mm)	FH & OH	L	W	C	C-C	F	G	Taps	ΦH
YRS-F1-710	710	4.00	177.50	green	322.14	102	3.17	290	280	130	240	-	35	100	3 x M12	2 x Φ16
YRS-F1-1100	1100	4.00	275.00	yellow	499.09	102	4.91									
YRS-F1-1300	1300	4.00	325.00	tan	589.84	102	5.81									
YRS-F1-1500	1500	4.00	375.00	brown	680.58	102	6.70									
YRS-F1-1750	1750	4.00	437.50	black	794.01	102	7.82									
YRS-F1-2000i	2000	4.00	500.00	black + white	907.44	102	8.93									
YRS-F1-2350	2350	4.00	587.50	orange	1066.24	102	10.49	330	300	160	260	130	50	100	3 x M12	2 x Φ16
YRS-F1-2650	2650	4.00	662.50	tan	1202.36	102	11.83									
YRS-F1-3000	3000	4.00	750.00	dark blue	1361.16	102	13.40									
YRS-F1-3300i	3300	4.00	825.00	dark blue+white	1497.28	102	14.74									
YRS-F1-3500	3500	4.00	875.00	black	1588.02	102	15.63	390	360	200	320	160	50	100	3 x M12	4 x Φ16
YRS-F1-4000i	4000	4.00	1000.00	black + red	1814.88	102	17.86									
YRS-F1-4600	4600	4.00	1150.00	blue	2087.11	102	20.54									
YRS-F1-5000	5000	4.00	1250.00	black	2268.60	102	22.33									
YRS-F1-5500	5500	4.00	1375.00	red	2495.46	102	24.56									
YRS-F1-6500	6500	4.00	1625.00	white	2949.18	102	29.03									
YRS-F1-7800	7800	4.00	1950.00	yellow	3539.02	102	34.83									
YRS-F2-6000	6000	4.00	1500.00	dark blue	2722.32	102	26.79	390	450	300	410	200	50	100	3 x M16	4 x Φ16
YRS-F2-6600i	6600	4.00	1650.00	dark blue+white	2994.56	102	29.47									
YRS-F2-7000	7000	4.00	1750.00	black	3176.04	102	31.26									
YRS-F2-8000i	8000	4.00	2000.00	black + red	3629.76	102	35.73									
YRS-F2-9200	9200	4.00	2300.00	blue	4174.23	102	41.08									
YRS-F2-10000	10000	4.00	2500.00	black	4537.21	102	44.66									
YRS-F2-11000	11000	4.00	2750.00	red	4990.93	102	49.12									
YRS-F2-13000	13000	4.00	3250.00	white	5898.37	102	58.05									
YRS-F2-15600	15600	4.00	3900.00	yellow	7078.04	102	69.67									
YRS-F4-12000	12000	4.00	3000.00	dark blue	5444.65	102	53.59	410	540	400	500	250	50	100	3 x M16	4 x Φ16
YRS-F4-13200i	13200	4.00	3300.00	dark blue+white	5989.11	102	58.95									
YRS-F4-14000	14000	4.00	3500.00	black	6352.09	102	62.52									
YRS-F4-16000i	16000	4.00	4000.00	black + red	7259.53	102	71.45									
YRS-F4-18400	18400	4.00	4600.00	blue	8348.46	102	82.17									
YRS-F4-20000	20000	4.00	5000.00	black	9074.41	102	89.32									
YRS-F4-22000	22000	4.00	5500.00	red	9981.85	102	98.25									
YRS-F4-26000	26000	4.00	6500.00	white	11796.73	102	116.11									
YRS-F4-31200	31200	4.00	7800.00	yellow	14156.08	102	139.33									